BD-000101223

ADR'S NO. A1

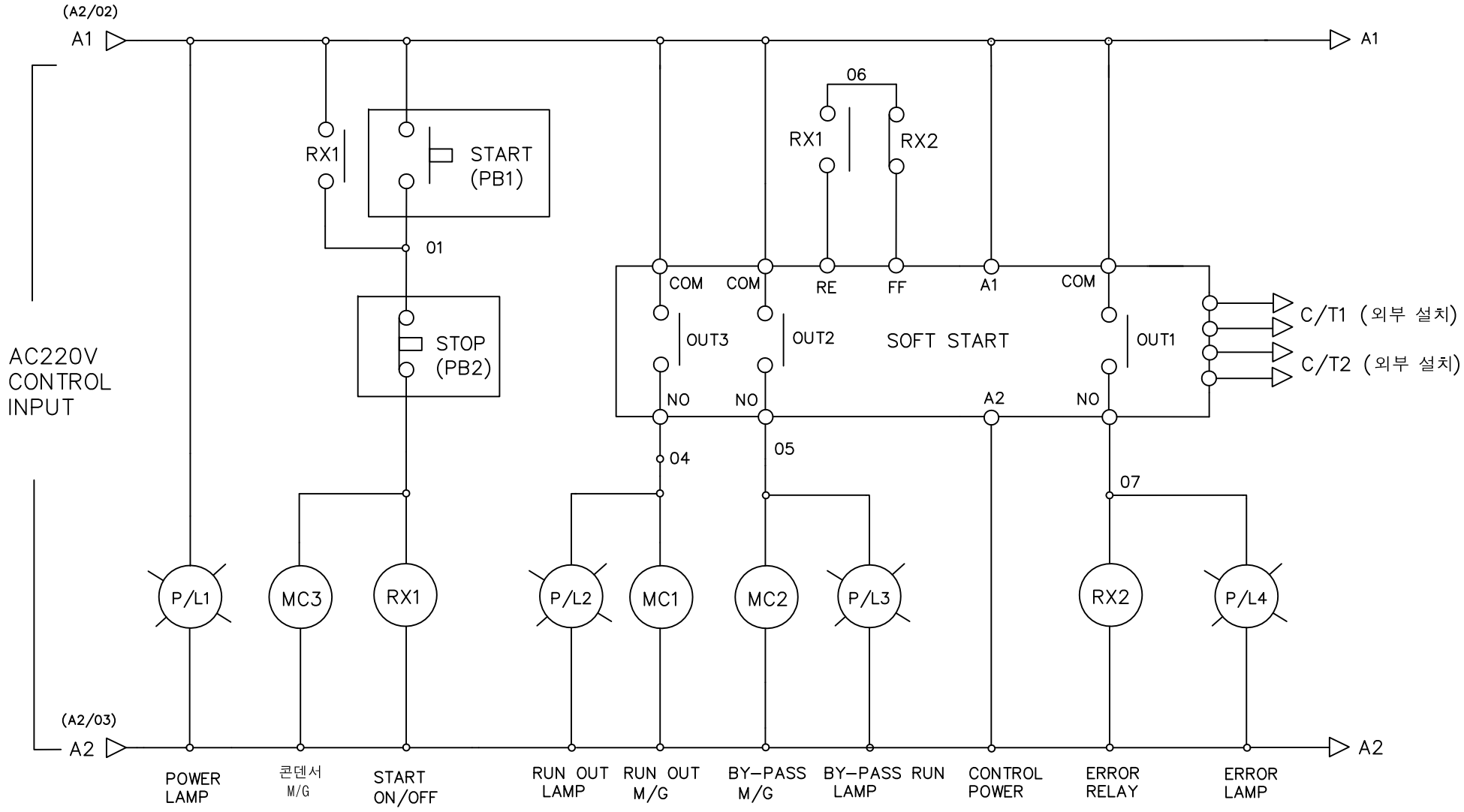

MK	DATE	REVISIONS	CHK.	APP.
4				
3				
2				
1				

CUSTOMER	SOFT START CONTROL CRICUIT
DRAWING TITLE	BY-PASS M/G OUT type
	BD-SS30BP-1

DRAWING	DESIGN	CHECKED	APPROVED	SCALE	DATE	ORDER NO.
				NONE	2011,12,23	
				DWG. NO	BD - 000516	