USR Semiconductor Co., Ltd

S20-XX00
FAST TURN-OFF
THYRISTOR

SYMBOL	CHARACTERISTIC	TEST CONDITIONS	T_j(°C)	VALUE			UNIT
				Min	Type	Max	
$I_{T(AV)}$	Mean on-state current	180° half sine wave 50Hz Double side cooled, T_{hS}=55°C	115			2024	A
$I_{T(AV)}$	Mean on-state current	180° half sine wave 50Hz Double side cooled, T_{hS}=80°C	115			1376	A
V_{DRM} V_{RRM}	Repetitive peak off-state voltage Repetitive peak reverse voltage	V_{DRM}&V_{RRM} tp=10ms V_{DsM}&V_{RsM}= V_{DRM}&V_{RRM}+100V respectively	115	2600		3000	V
I_{DRM} I_{RRM}	Repetitive peak current	at V_{DRM} at V_{RRM}	115			200	mA
I_{TSM}	Surge on-state current	10ms half sine wave V_R=0.6V_{RRM}	115			27	KA
I^2T	I^2T for fusing coordination					3645	A^2s*10^3
V_{TO}	Threshold voltage		115			1.50	V
r_T	On-state slop resistance					0.24	mΩ
V_{TM}	Peak on-state voltage	I_{TM}=4000A, F=40KN	115			2.46	V
dv/dt	Critical rate of rise of off-state voltage	V_{DM}=0.67V_{DRM}	115			500	V/μs
di/dt	Critical rate of rise of on-state current	From 67%V_{DRM} to 1500A, Gate source 1.5A t_r ≤0.5μs Repetitive	115			600	A/μs
I_{rm}	Reverse recovery current	I_{TM}=1000A,tp=1000μs, di/dt=-40A/μs, V_R=50V	115		175		A
t_{rr}	Reverse recovery time				10.3		μs
Q_{rr}	Recovery charge				906	1000	μC
tq	Circuit commutated turn-off time	I_{TM}=1000A,tp=1000μs, V_R =50V dv/dt=30V/μs ,di/dt=-40A/μs	115	35		70	μs
I_{GT}	Gate trigger current	V_A=12V, I_A=1A	25	40		450	mA
V_{GT}	Gate trigger voltage			0.9		4.5	V
I_H	Holding current			20		1000	mA
V_{GD}	Non-trigger gate voltage	At 67%V_{DRM}	115			0.3	V
$R_{th(j-h)}$	Thermal resistance Junction to heatsink	At 180^0 sine, double side cooled Clamping force 40KN				0.011	°C /W
F_m	Mounting force			35		47	KN
T_{stg}	Stored temperature			-40		140	°C
W_t	Weight				1100		g
Outline	KT73cT						
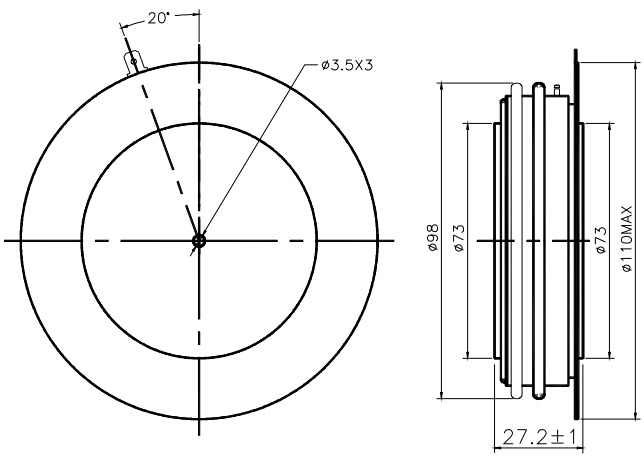
Outline